REVISION RECORD 修 改 紀 錄					
REV	ECO	DESCRIPTION	DATE	DRFT	CHKD

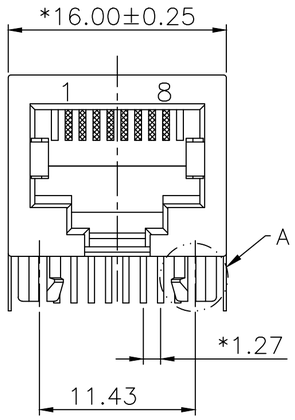

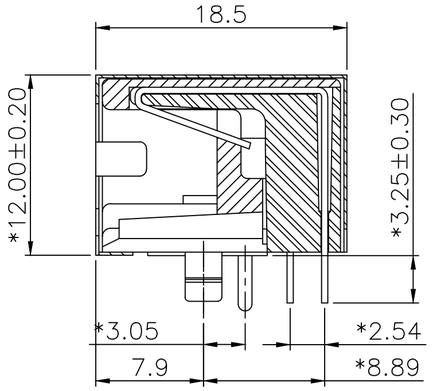

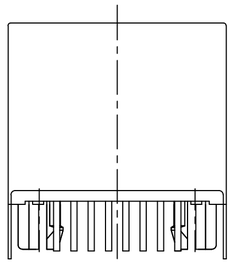

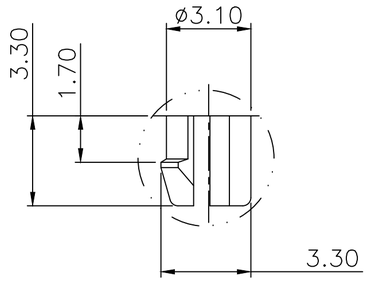

DETAIL "A"

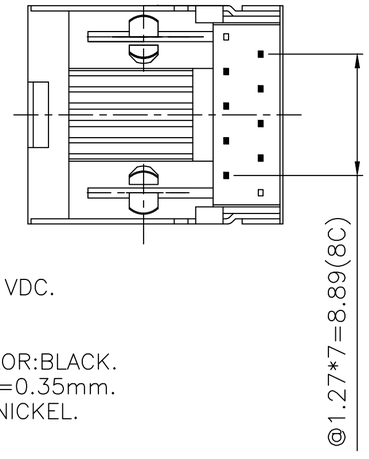

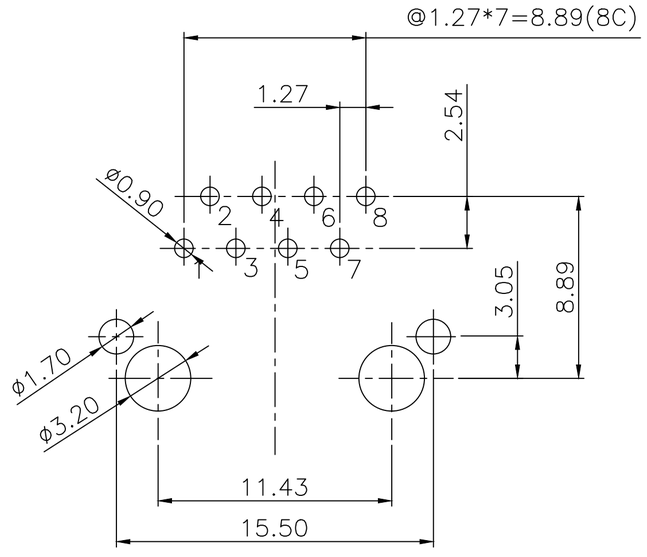

PC Board Layout Component Side Shown

NOTES:

ELECTRICAL:

1. VOLTAGE RATING : 125 VAC RMS.
2. CURRENT RATING : 1.5 AMP.
3. CONTACT RESISTANCE : 30 MILLIOHMS MAX.
4. INSULATION RESISTANCE: 1000 MEGOHMS MIN @ 500 VDC.
5. DIELECTRIC STRENGTH : 1000 VDC RMS 60Hz, 1MIN.

MECHANICAL:

1. HOUSING MATERIAL : NYLON UL94V-0./COLOR:BLACK.
2. CONTACT MATERIAL : PHOSPHOR BRONZE t=0.35mm.
3. PLATING : GOLD PLATING OVER NICKEL.
4. OPERATING LIFE : 750 CYCLES MIN.
5. PCB RETENTION PRE-SOLDER : 1 LB MIN.
6. PCB RETENTION POST-SOLDER: 10 LBS MIN.

ENVIRONMENTAL:

1. STORAGE : -40°C TO +85°C.
2. OPERATION: -40°C TO +85°C.
3. WAVE SOLDERING TEMPERRATURE: 250°C ~260°C (3~5 SECONDS).
4. RoHS COMPLIANT.

MATES WITH MODULAR PLUG CONFORMING TO FCC PART 68, SUBPART F.

CUL FILE NO. E345295

PART NUMBER: EL260X-X42038X

8-8 CONTACTS

0-W/O LOGO

1-3u" 2-6u"
3-15u" 4-30u"
5-50u" F-GOLD FLASH

單位: mm		DFTO: Ina	DATE: 2015.05.03
長度公差	角度公差	CHKD: Jeff	DATE: 2015.05.03
.0 ± 0.25	0° ± 5°	APPVL: W.B.Huang	DATE: 2015.05.03
.00 ± 0.15		脫摸角:	顏色:
.000 ± 0.10			MATERIAL: 材 質
			TREAT: 處 理
			QTY: 數 量
			SCALE: 比 例 1 : 1

THIRD ANGLE PROJECTION

ELLAX CORPORATION.

TITLE: 11.5 SIDE ENTRY PCB GANG JACK 10P

DWG NO.	EL2608-0420382	SIZE	REV
DRAWING NO: 圖檔編號	EL260X-X42038X	A4	A
PART NO: 零件編號		1 of 1	